2017 년도 한국철도학회 추계계학술대회 논문집 KSR2017A176

SPD 상태진단을 위한 누설전류 검출법

Detection Method of Leakage Current for Condition Monitoring of Surge Protective Devices

왕국명*, 황성철*, 김우현*, 길경석*†
Guoming Wang*, Seong-Cheol Hwang*, Woo-Hyun Kim*, Gyung-Suk Kil*†

Abstract This paper dealt with the detection method of leakage current for the purpose of on-line condition monitoring of surge protective devices (SPD). An analyzer composed of a zero-phase current transformer, a differential amplifier, and a data acquisition unit was design. The odd order harmonics of leakage current, including the fundamental, third, fifth, seventh, and ninth components, were extracted using the fast Fourier transform. The performances of the developed analyzer were evaluated by applying it to analyze a new and a degraded SPD and the results were compared with that of an existing detector.

Keywords : Surge protective devices, Condition monitoring, Leakage current, Harmonic analyzer

1. Introduction

The surge protective devices (SPD) degrade gradually when subjected to continuous operating voltage, overvoltage, and environmental stresses. Left with uncheck, the degradation results in thermal runaway of SPD, causing the line-to-ground fault and consequent electrical accidents [1-3]. Condition monitoring of SPD is the most effective method to ensure their reliability. The resistive component of total leakage current has been proposed as an indicator of electrical aging of SPD, however, additional voltage signal is required for subtracting the capacitive component. The odd order harmonic components of total leakage current also increase with the degradation of SPD as the resistive leakage current, but can be easily extracted [4-5]. Therefore, the harmonic analysis method was used for development the on-line SPD monitoring device.

† 교신저자: 한국해양대학교 공과대학 전자전기정보공학부(kilgs@kmou.ac.kr)
* 한국해양대학교 공과대학 전기전자공학과

2. Detection Method of Leakage Current

2.1 Design of an analyzer

The configuration of analyzer is shown in Fig. 1. It consisted of a zero-phase current transformer (ZCT), a differential amplifier, and a data acquisition unit (DAQ). The minute leakage current was magnified by the amplifier so that it can be recognized by the DAQ. Fig. 2 shows the frequency response of the analyzer. The input current with a frequency up to 800Hz can be detected without attenuation, therefore, the harmonic contents can be

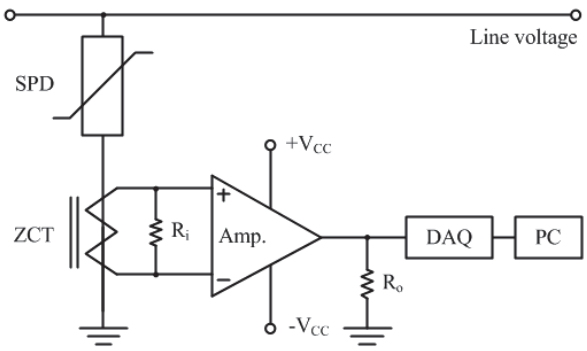

Fig. 1 Configuration of harmonic analyzer

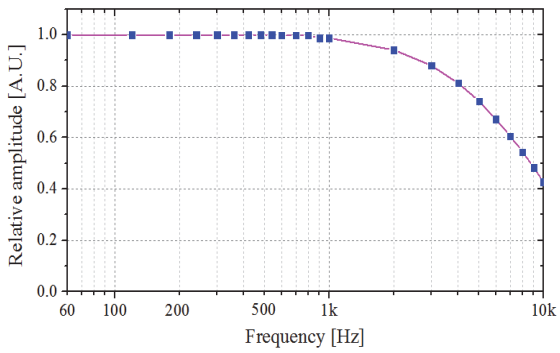

Fig. 2 Frequency response of the analyzer

exactly acquired. The fundamental (I_{1st}), third (I_{3rd}), fifth (I_{5th}), seventh (I_{7th}), and ninth (I_{9th}) harmonic components of total leakage current (I_T) were extracted using the fast Fourier transform based on LabVIEW program.

2.2 Performance evaluation

The existing leakage current detector only analyzes the fundamental and third harmonics whereas the developed device can analyze the harmonic contents up to the ninth. The performance evaluation of the developed device was carried out by applying it to analyze a new and a degraded SPD. Result comparisons of the developed and the existing analyzer are shown in Table 1. It can be seen that almost the same results were obtained by two devices whereas the developed one can real-time display the waveforms of total leakage current and its harmonic components.

Table 1 Performance evaluation of developed analyzer

Item	Leakage current [μA]			
	New SPD		Degraded SPD	
	Developed	Existing	Developed	Existing
I_T	392.9	392	782.9	783
I_{1st}	381.7	391	622.0	626
I_{3rd}	17.9	18.3	385.0	386
I_{5th}	3.8	-	245.3	-
I_{7th}	2.7	-	117.2	-
I_{9th}	0.8	-	35.0	-

3. Conclusions

In this paper, an analyzer for on-line condition monitoring of SPD was developed, which can measure the total leakage current and analyzed the harmonic components up to the ninth order. By comparing its performance with an existing detector, it was confirmed that the developed device had a high accuracy.

Acknowledgement

This research was financially supported by the Ministry of Science, ICT and Future Planning (MSIP) and INNOPOLIS Foundation (16BSI1828) and by the National Security Research Institute under the Domestic Contract Research Project (2017-116).

References

[1] K.S. Park, S.J. Kim, G.M. Wang, S.C. Hwang, G.S. Kil (2016) Deterioration Characteristics of a Railway Arrester by Lightning Impulse Current, *Spring Conference of the Korean Society for Railway*, Gyeongju, Korea, p.147.

[2] G.S. Kil, J.S. Han, M.S. Han (2004) A study on the deterioration progress of railway arresters, *Journal of the Korean Society for Railway*, 7(4), pp.93-97.

[3] K.S. Park, G.M. Wang, S.C. Hwang, S.J. Kim, G.S. Kil (2016) Deterioration Characteristics and an On-Line Diagnostic Equipment for Surge Protective Devices, *Journal of the Korean Institute of Electrical and Electronic Material Engineers,* 29(10), pp.635-640.

[4] C. Heinrich, V. Hinrichsen (2001) Diagnostics and Monitoring of Metal-Oxide Surge Arresters in High-Voltage Networks - Comparison of Existing and Newly Developed Procedures, *IEEE Transactions on Power Delivery*, 16(1), pp.138-143.

[5] J. Lundquist, L. Stenstrom, A. Schei, B. Hansen (1990) New Method for Measurement of the Resistive Leakage Current of Metal-oxide Surge Arrester in Service, *IEEE Transactions on Power Delivery*, 5(4), pp.1811-1822.